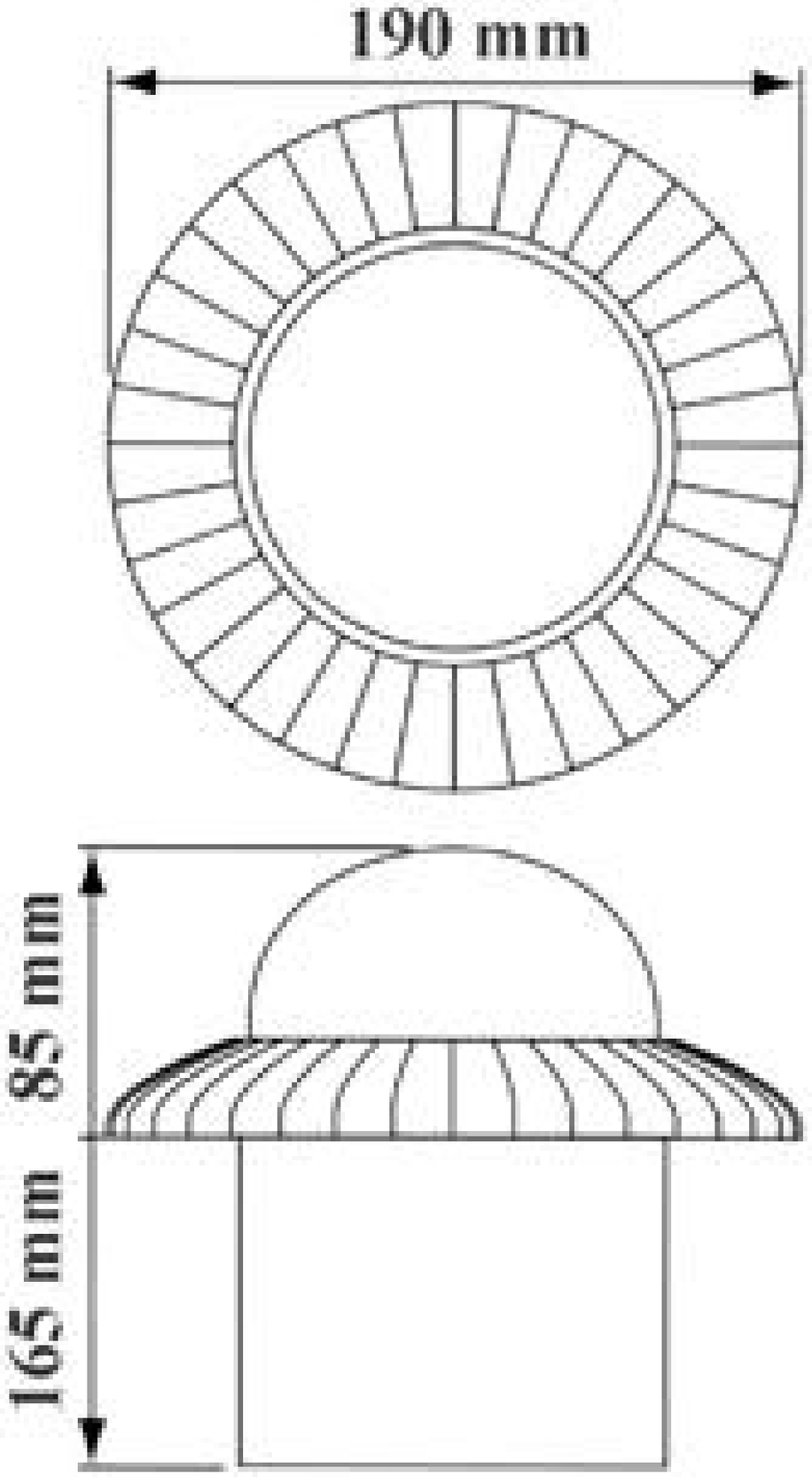
165 mm
85 mm
190 mm